Ledvance | PAR16 | Dimmable LED Lamp | GU10 | 575lm | CRI97 | 3000K

LED-4099854456756 / ITM003244



Datasheet

23-10-2026

Ledvance | PAR16 | Dimmable LED Lamp | GU10 | 575lm | CRI97 | 3000K



Bulb Cap	CRI	Material	Warranty
GU10	>97	Glass	5 Years

SKU: LED-4099854456756
ITM: ITM003244

Key Features:

- **Light Colour:** Warm White
- **Equivalent Wattage:** 80W

Mechanical Data			
Base Type:	GU10	**Diffuser Material:**	Glass
Product Weight:	40g	**Product Diameter:**	50mm

Electrical Data			
Equivalent Wattage:	80W	**Wattage:**	6W

Input Data			
Input Frequency:	50Hz - 60Hz	**Input Voltage:**	220V - 240V
Power Factor:	1A		

Control Data			
Dimmable:	Yes	**Dimming Type:**	TRIAC

Photometric Data

Beam Angle:	36°	**CCT:**	3000K
CRI:	97	**Diffuser Colour:**	Clear
Diffuser Finish:	Clear	**Light Colour:**	Warm White
Lumen Total:	575Lm	**Lumens Per Watt:**	69Lm/W
Lumens Per Watt (White 2):	69Lm/W	**Lumens Per Watt (White):**	69Lm/W
Luminous Intensity:	900cd	**Peak Luminous Intensity:**	900cd
Bulb Colour:	Warm White		

Environmental Data

Body Material:	Glass

Efficiency Data

Lumen Maintenance Factor:	1	**Rated Life:**	40000 Hours
Startup Time:	1 Secs	**Switch Cycles:**	100000

Dimension Drawing

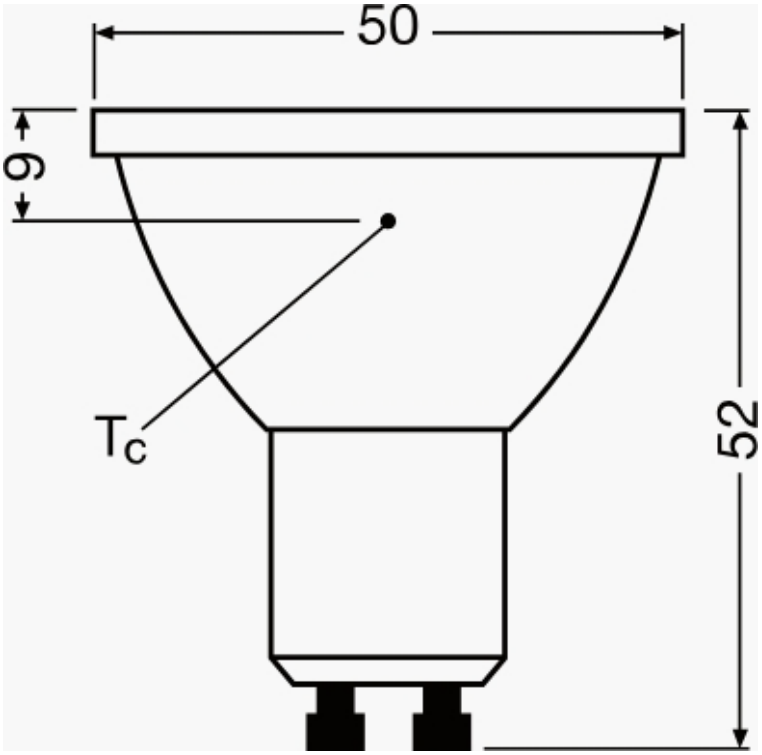

Disclaimer

Tagra Lighting have taken reasonable care to ensure that the information in this datasheet is accurate at time of publication however it should be noted that all specifications are subject to tolerance. Descriptive specifications such as colour are subjective. Tagra Lighting reserve the right to update specifications without notice. The information in the datasheet may only be relied on by customers of Tagra Lighting in accordance with applicable terms and conditions.

Tagra Lighting is a trading name of T.R Ventures Limited, a company incorporated in England with registered number 07757720. Our registered office is Unit 2, Southfield Industrial Estate, Trafford Park, M17 1SJ.

www.tagra-lighting.co.uk

support@tagra-lighting.co.uk